Diritti riservati All rights reserved

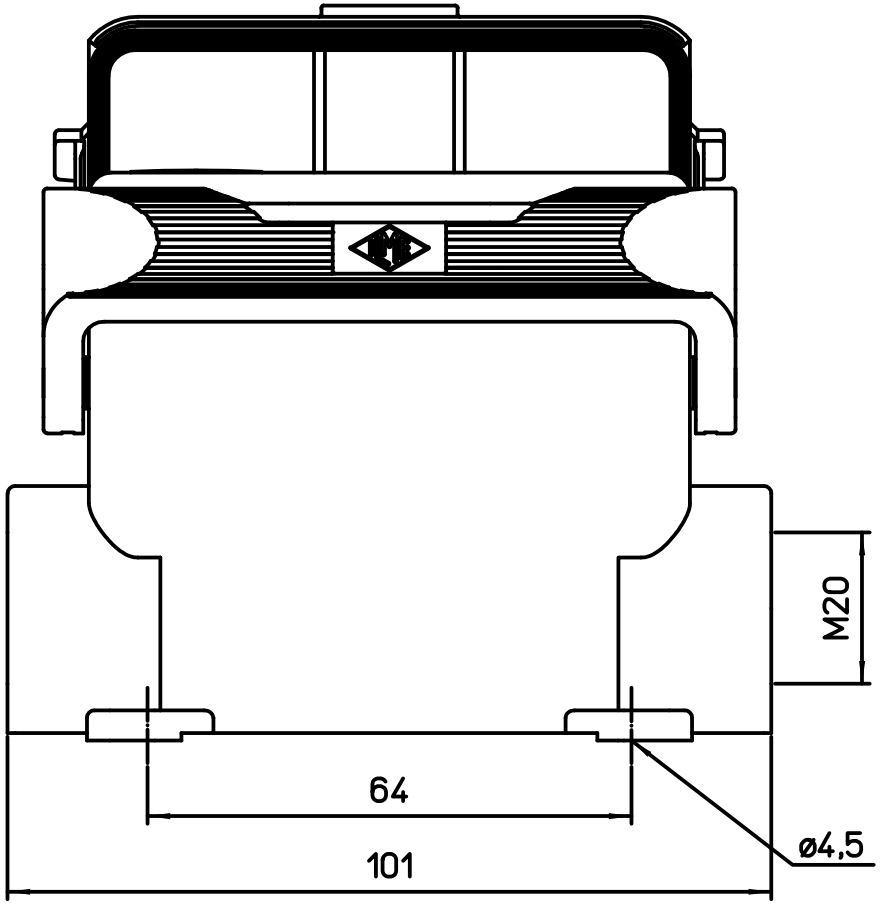

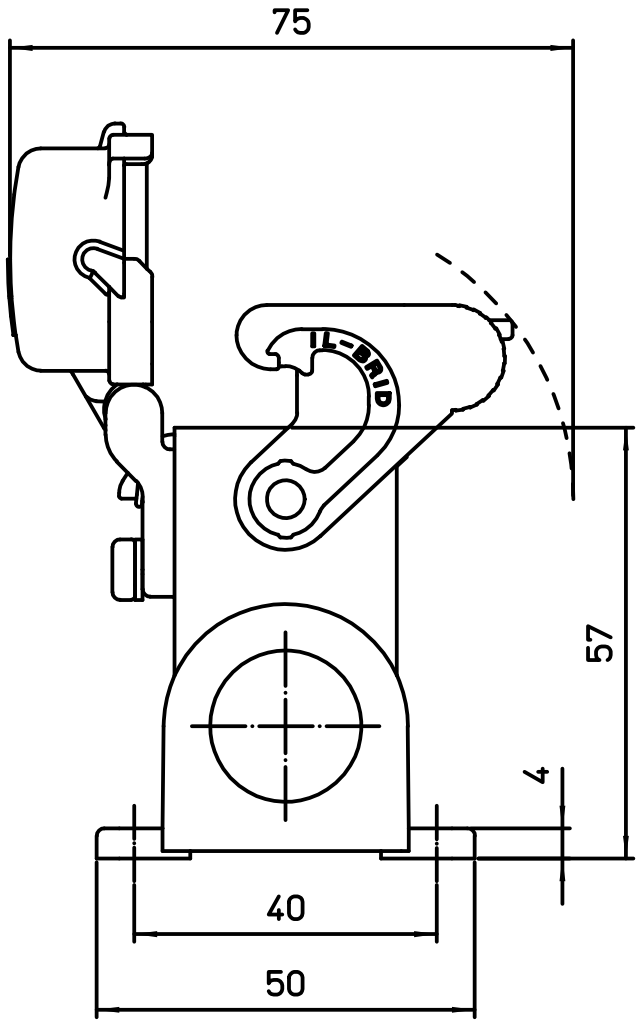

dimensions in mm	
Date	21/03/19
Sign.	Pitasi

MZAP 25LSP20

Surface mounting housings with 1L and cover, M20 - SIMPLEX

Scale 1:1